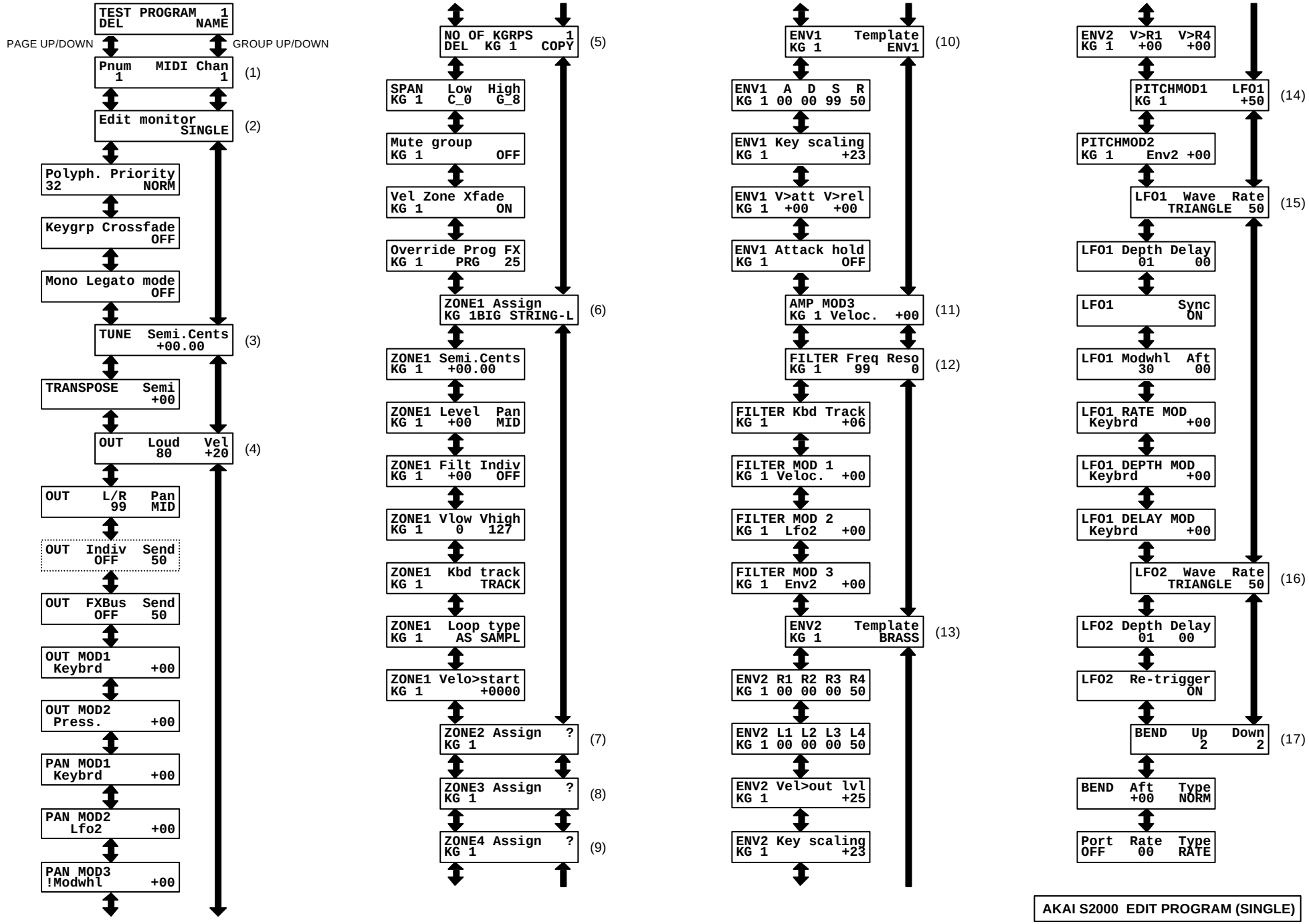

AKAI S2000 EDIT PROGRAM (SINGLE)

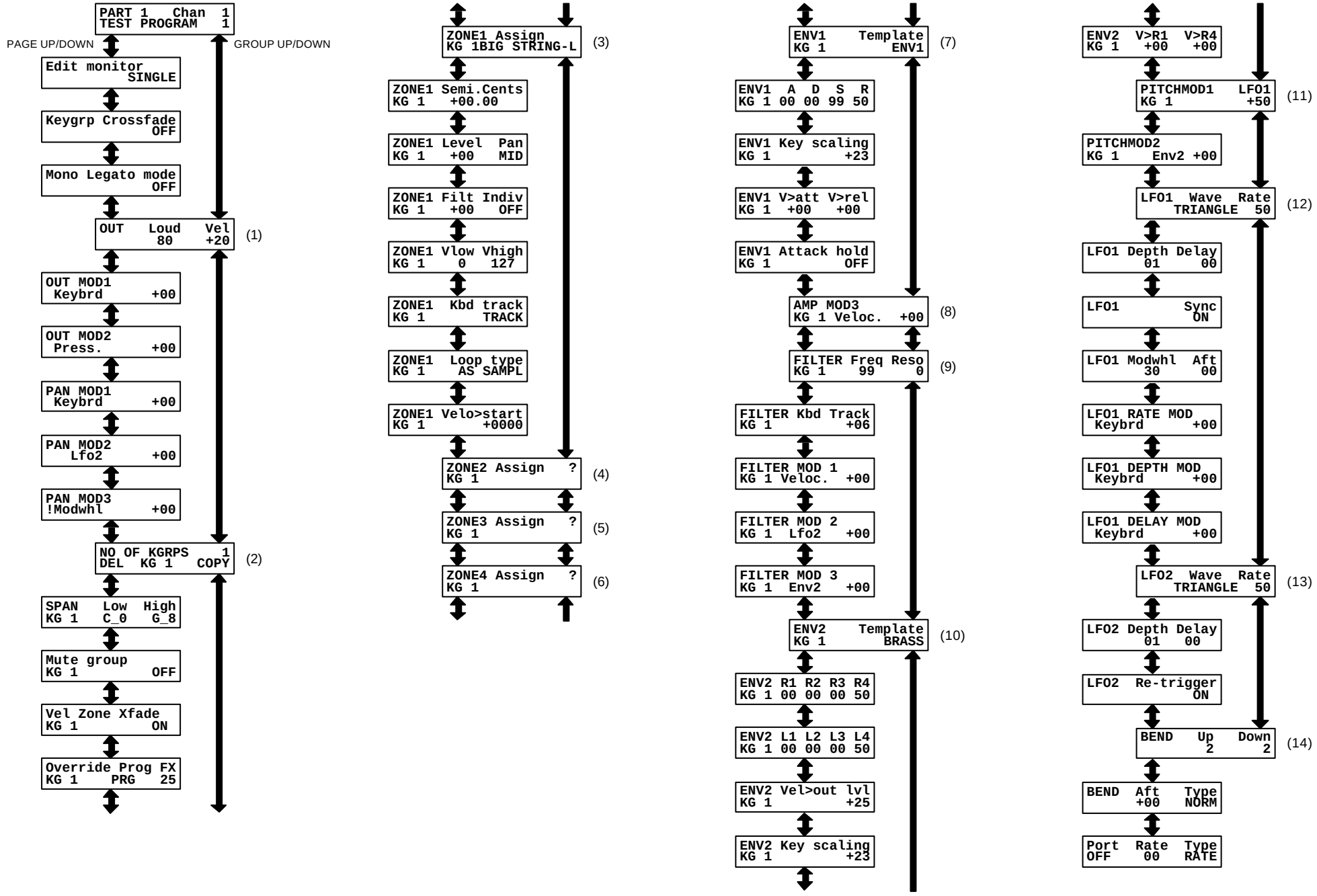

AKAI S2000 EDIT PROGRAM (MULTI)

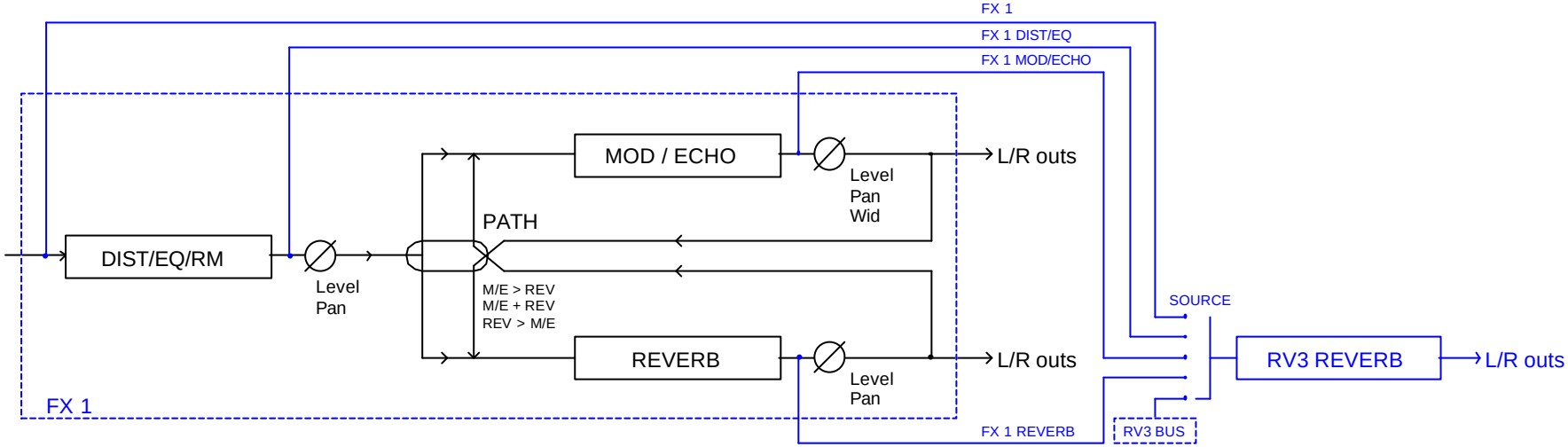
FX 1
FX 1 DIST/EQ
FX 1 MOD/ECHO
MOD / ECHO
L/R outs
Level
Pan
Wid
PATH
DIST/EQ/RM
Level
Pan
M/E > REV
M/E + REV
REV > M/E
SOURCE
REVERB
L/R outs
Level
Pan
RV3 REVERB
L/R outs
FX 1
FX 1 REVERB
RV3 BUS

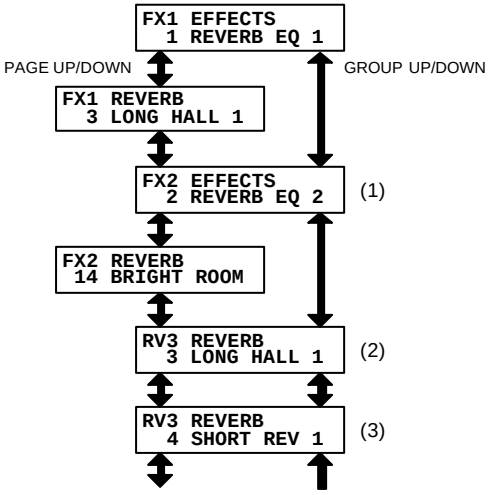
FX1 EFFECTS
1 REVERB EQ 1
PAGE UP/DOWN
GROUP UP/DOWN
FX1 REVERB
3 LONG HALL 1
FX2 EFFECTS
2 REVERB EQ 2
(1)
FX2 REVERB
14 BRIGHT ROOM
RV3 REVERB
3 LONG HALL 1
(2)
RV3 REVERB
4 SHORT REV 1
(3)

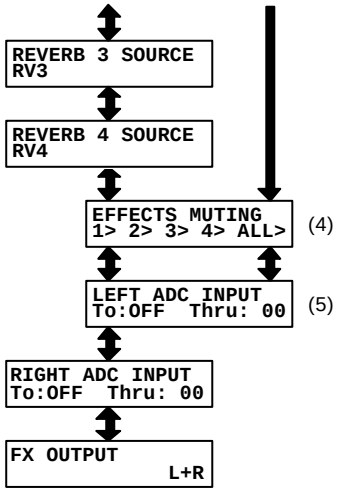
REVERB 3 SOURCE
RV3
REVERB 4 SOURCE
RV4
EFFECTS MUTING
1> 2> 3> 4> ALL>
(4)
LEFT ADC INPUT
To:OFF Thru: 00
(5)
RIGHT ADC INPUT
To:OFF Thru: 00
FX OUTPUT
L+R

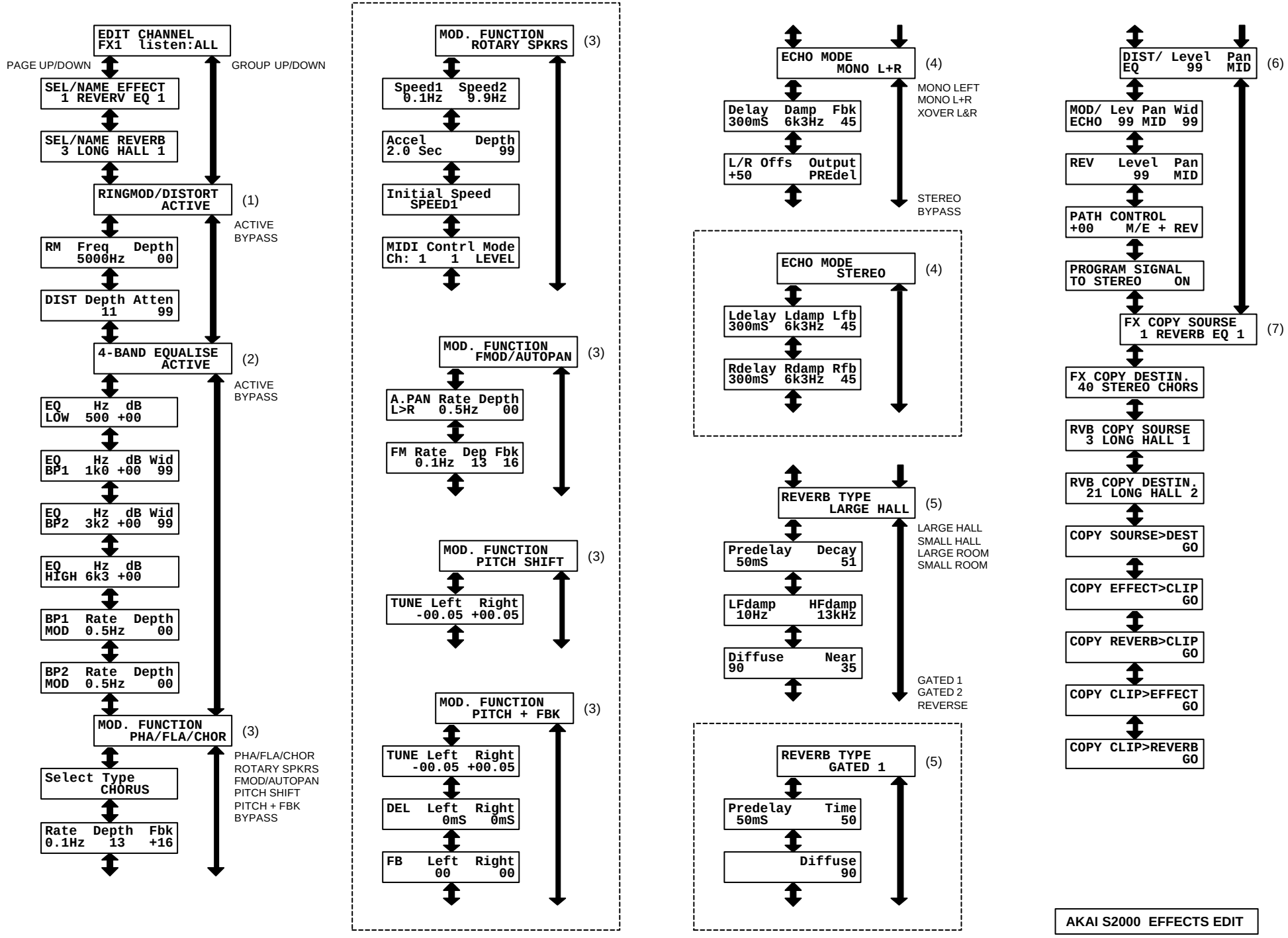

AKAI S2000 EFFECTS EDIT